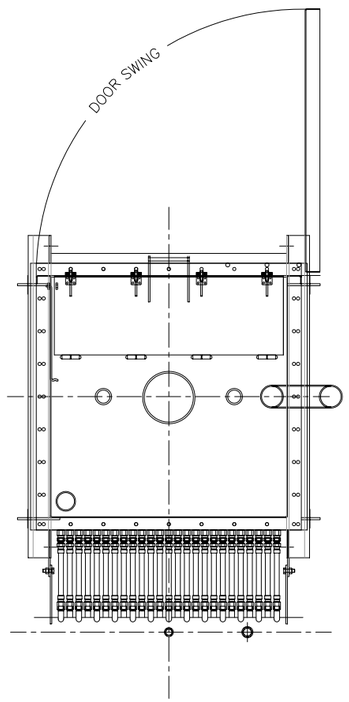

PLAN VIEW

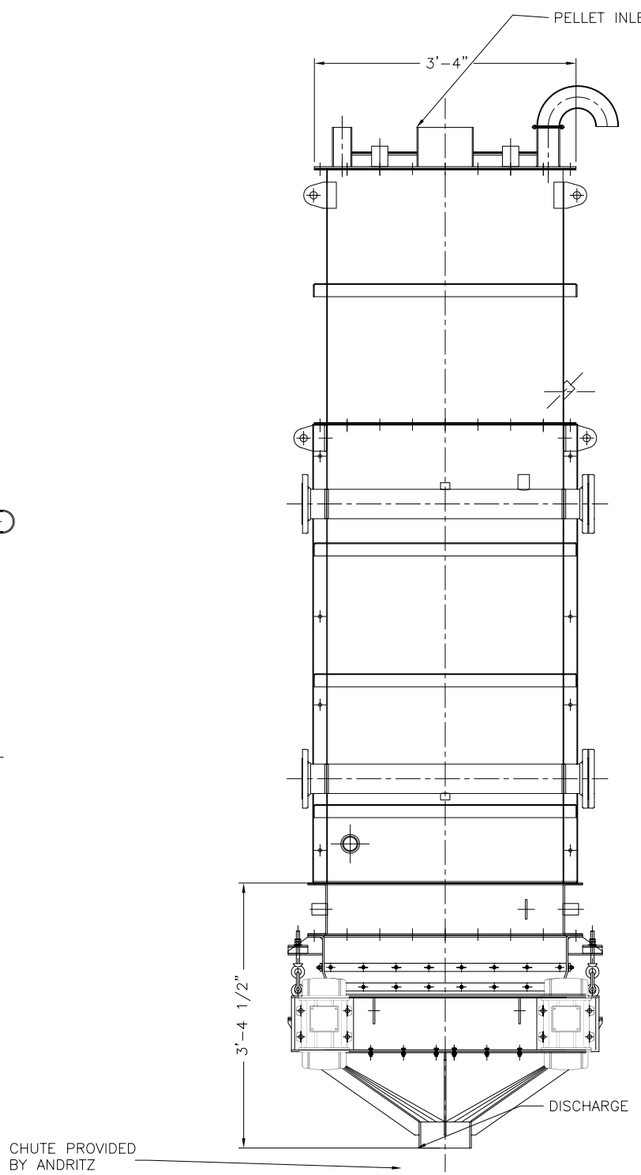

ELEVATION VIEW

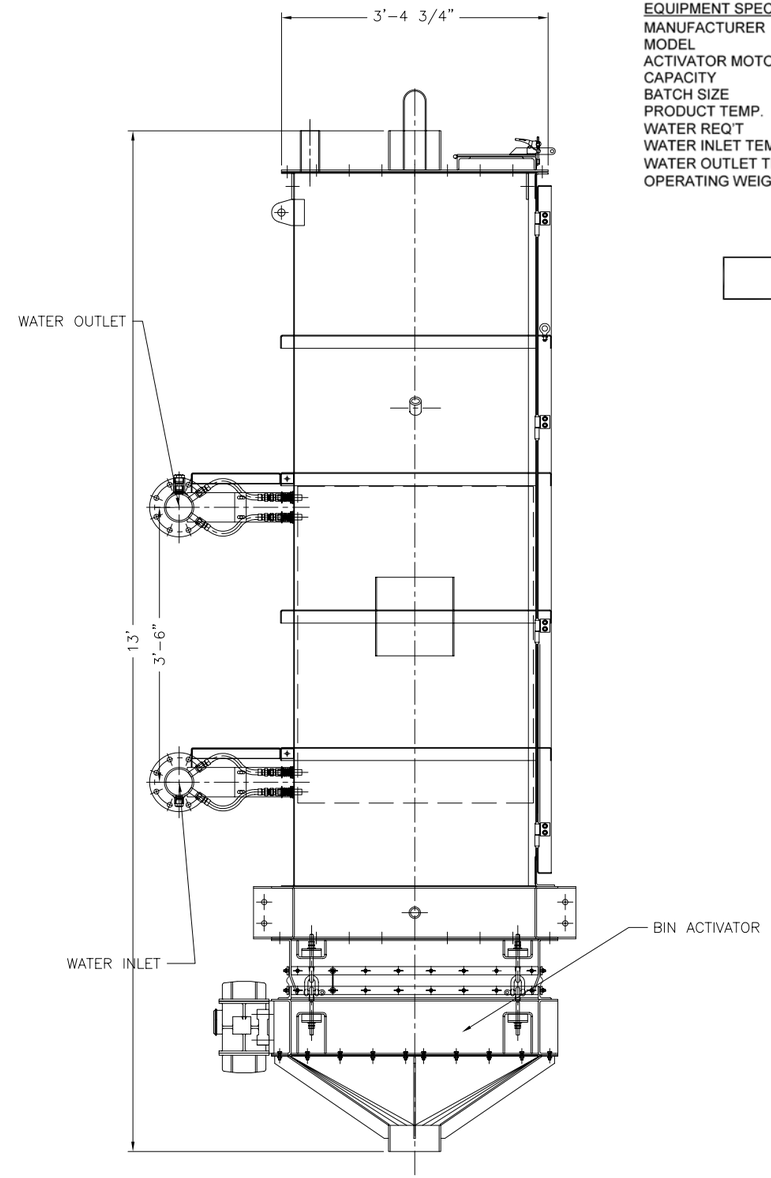

END VIEW

NOTES:

1. MATERIAL OF CONSTRUCTION:
   COOLER HOUSING - CARBON STEEL
   HEAT EXCHANGER PLATE BANK 316L S.S.
2. COOLER HOUSING SHALL BE EQUIPPED WITH BIN ACTIVATOR.
3. PROVIDE LEVEL PROBE FOR FLOW CONTROL.
4. ALL INSPECTION DOORS THAT PERMIT ACCESS TO MOVING PARTS SHALL BE BOLTED.
5. PAINT SPECIFICATIONS:
   HOUSING SHALL BE FINISH PAINTED. PAINT SYSTEM SHALL INCLUDE SP6 BLAST, 2.5 MILS DFT EPOXY PRIMER, AND 3.0 MILS DFT POLYURETHANE ENAMEL.
6. MANUFACTURER SHALL TAG ALL COMPONENTS BEFORE SHIPPING. ONE EXTRA COPY OF THE INSTALLATION INSTRUCTIONS SHALL BE INCLUDED IN SHIPMENT.

EQUIPMENT SPECIFICATIONS

MANUFACTURER	BULK FLOW
MODEL	PELLET COOLER
ACTIVATOR MOTORS	.75 HP 460/3/60 TEFC
CAPACITY	3,200 LBS/HR AVERAGE
BATCH SIZE	10 CUFT
PRODUCT TEMP.	170° NOMINAL
WATER REQ'T	80 GPM
WATER INLET TEMP	75° MAX
WATER OUTLET TEMP	78° NOMINAL
OPERATING WEIGHT	10,200 LBS

TAG EQP'T 40.060.000

ANDRITZ
ANDRITZ-RUTHNER, INC.
1010 COMMERCIAL BLVD. SOUTH
ARLINGTON, TEXAS 76001
(817) 465-5611

STATE OF CONNECTICUT PROFESSIONAL ENGINEER

REV	REVISION	DATE
1	UPDATED EQUIPMENT SPECS	01/24/06
0	FOR FINAL REVIEW/BUILDING PERMIT	06/05/06

DRAWN BY: JEN DATE: 12/27/05
CHECKED BY: DATE:
APPROVED BY: DATE:
SCALE: 1"=1'-0" FILE 152406000
SIZE DDS40

JOB NAME: CITY OF STAMFORD CONNECTICUT SOLIDS DRYING PROJECT

TITLE: PELLET COOLER (060) GENERAL ARRANGEMENT

PROJECT NUMBER 1524
DRAWING NUMBER 060-00 REV 1
SHEET 1 OF 1

THIS DRAWING IS COPY RIGHTED
THIS DRAWING IS A TRADE SECRET AND ONLY ENTRUSTED TO THE RECIEVER FOR HIS PERSONAL USE. WITHOUT THE SIGNED WRITTEN CONSENT OF ANDRITZ-RUTHNER, INC., IT MUST NOT BE COPIED NOR MADE AVAILABLE TO THIRD PARTIES, INCLUDING COMPETITORS, NOR MADE ACCESSIBLE TO SUCH PARTIES. ANY ILLEGAL USE BY THE RECIEVER OR THIRD PARTIES FOR WHICH HE IS RESPONSIBLE CAN CONSTITUTE A CAUSE FOR LEGAL ACTION. THIS DRAWING MUST BE RETURNED ON REQUEST OF THE COMPANY.