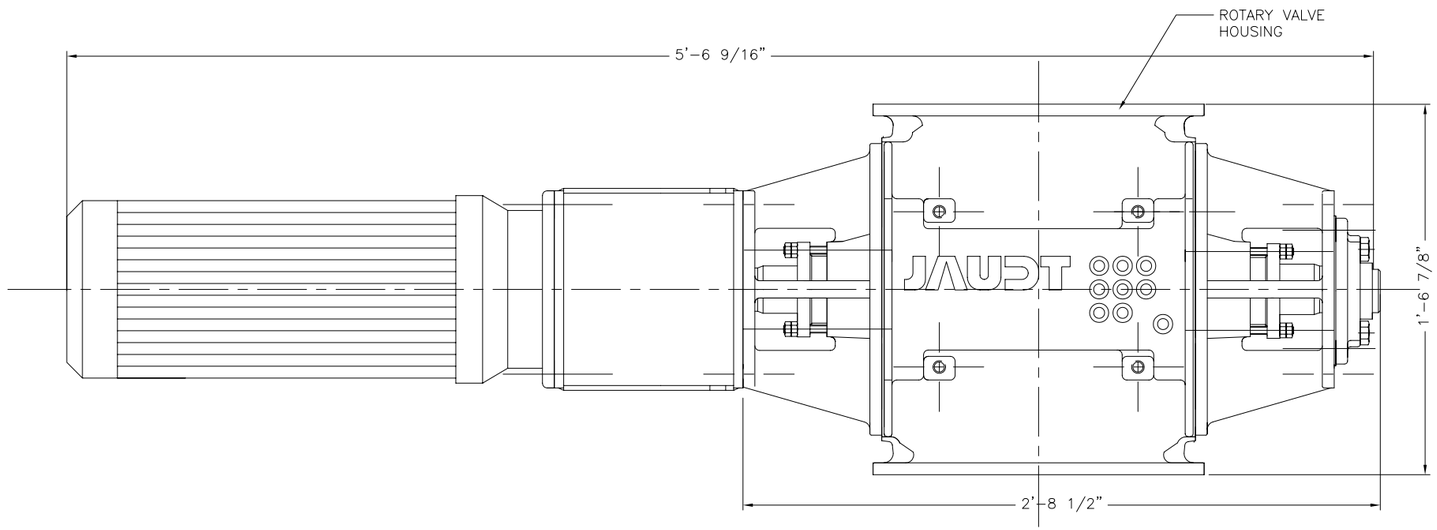

ELEVATION VIEW

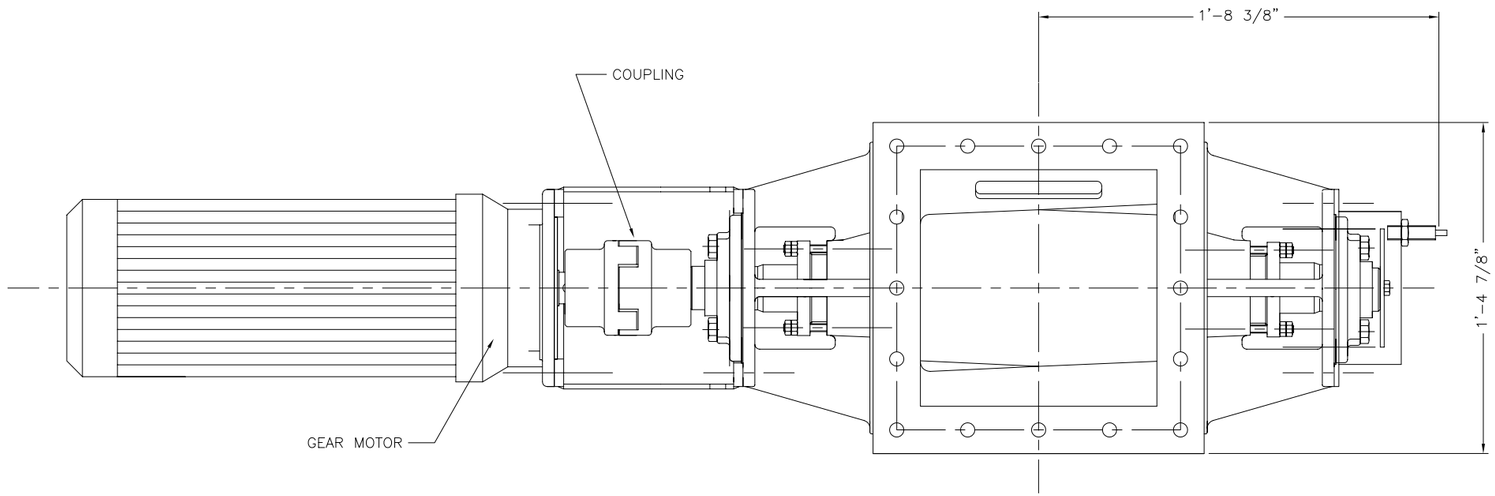

PLAN VIEW

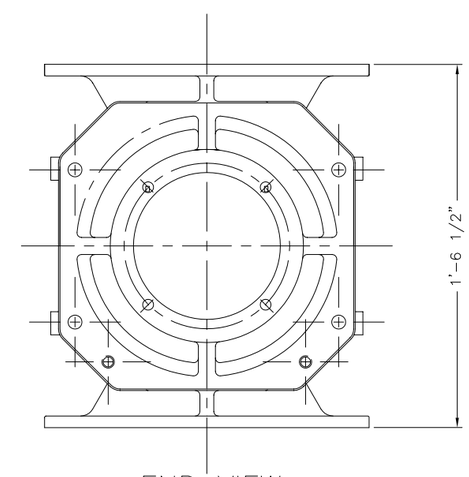

END VIEW

NOTES:

1. MATERIAL OF CONSTRUCTION: CAST IRON HOUSING w/ CHROME PLATED BORE. ROTOR, CARBON STEEL w/ ANTI-WEAR TIPS.
2. ROTARY VALVE SHALL BE PROVIDED WITH BOLTED INSPECTION HATCHES.
3. ROTOR SHAFTS SHALL BE SEALED WITH PACKING GLAND TO PREVENT DUST LEAKAGE.
4. FABRICATOR TO SUPPLY A TELEMACANIQUE XSAV ZERO SPEED SWITCH.
5. PAINT SPECIFICATIONS:
   ROTARY VALVE SHALL BE SURFACE PREPARED AND PAINTED IN ACCORDANCE WITH MANUFACTURER'S STANDARD HEAVY DUTY ENAMEL FINISH.
6. VALVE TO INCLUDE SHAFT MOUNTED GEAR REDUCER. REDUCER SHALL HAVE A MINIMUM 1.5 SF BASED UPON MOTOR NAME PLATE HORSEPOWER.
7. MANUFACTURER TO TAG ALL COMPONENTS (BEFORE SHIPPING) FOR ASSEMBLY.

EQUIPMENT SPECIFICATIONS

MANUFACTURER	JAUDT
MODEL	ZS ExZu 300x300/470
MOTOR	SEW 1.5HP 480/3/60 NEMA
CAPACITY	1201 CUFT/HR @ 100% FILLING
SPEED	21 RPM
WEIGHT	675 LBS

TAG EQP'T 40.006.000

ANDRITZ
ANDRITZ-RUTHNER, INC.
1010 COMMERCIAL BLVD. SOUTH
ARLINGTON, TEXAS 76001
(817) 465-5611

STATE OF CONNECTICUT PROFESSIONAL ENGINEER

REV	REVISION	DATE
1	UPDATED LAYOUT	01/16/07
0	FOR FINAL REVIEW/BUILDING PERMIT	06/05/06

DRAWN BY: JEN DATE: 12/20/05
CHECKED BY: DATE:
APPROVED BY: DATE:
SCALE: 3"=1'-0" FILE 152400600
SIZE DDS40

JOB NAME: CITY OF STAMFORD CONNECTICUT SOLIDS DRYING PROJECT

TITLE: ROTARY AIR LOCK (006) GENERAL ARRANGEMENT

PROJECT NUMBER 1524
DRAWING NUMBER 006-00 REV 1
SHEET 1 OF 1

THIS DRAWING IS COPY RIGHTED
THIS DRAWING IS A TRADE SECRET AND ONLY ENTRUSTED TO THE RECIEVER FOR HIS PERSONAL USE. WITHOUT THE SIGNED WRITTEN CONSENT OF ANDRITZ-RUTHNER, INC., IT MUST NOT BE COPIED NOR MADE AVAILABLE TO THIRD PARTIES, INCLUDING COMPETITORS, NOR MADE ACCESSIBLE TO SUCH PARTIES. ANY ILLEGAL USE BY THE RECIEVER OR THIRD PARTIES FOR WHICH HE IS RESPONSIBLE CAN CONSTITUTE A CAUSE FOR LEGAL ACTION. THIS DRAWING MUST BE RETURNED ON REQUEST OF THE COMPANY.